The Scientific Association Dedicated to Analytical Excellence®

Roles and Responsibilities of the General Referee (GR) & Topic Advisor (TA) in Method Centric Validation

Diane Rains
Official Methods Board

The Scientific Association Dedicated to Analytical Excellence®

AOAC Volunteers

(not all categories listed!!)

- **Community Officers**
- **Study Directors**
- **Methods Committee Members (voting)**
- **Methods Committee Advisors (non-voting)**
- **Official Methods Board**

Outline

- **What is a GR, What is a TA?**
- **Where do they fit in the process?**
- **Duties & Responsibilities**
- **Selection and Appointment Criteria**
- **Appointment Process**
- **Rewards of service**

What is a General Referee?

- **Someone who acts as a facilitator between Study Directors and the AOAC OMB or Method Committee**
- **Serves as a key technical and *validation process expert* in the peer review process**

Study Directors who need assistance with the AOAC validation process can ask to have a GR appointed

The OMB, Committees, Communities, and Stakeholders can also ask for assistance from a GR

Position Description: General Referee (GR)

- The AOAC Process Expert
- Must have knowledge and experience of the validation and collaborative study process, either through training or experience
- Approved by the OMB to serve as process advisors to the OMB, Study Directors, Method Committees, Communities, and Stakeholders

What is a Topic Advisor?

- **Someone who advises the AOAC OMB or Method Committee on technical matters pertaining to a method. That is, as a *subject matter expert.***

Position Description: Topic Advisor (TA)

- **Scientific and Technical Expert**
- **Has knowledge and experience of the collaborative study process, either through training or experience**
- **Approved by the OMB to serve as *Subject Matter Experts* to the OMB, Methods Committees, Communities and Stakeholders.**

Collaborative Study Evaluation: Early Stages

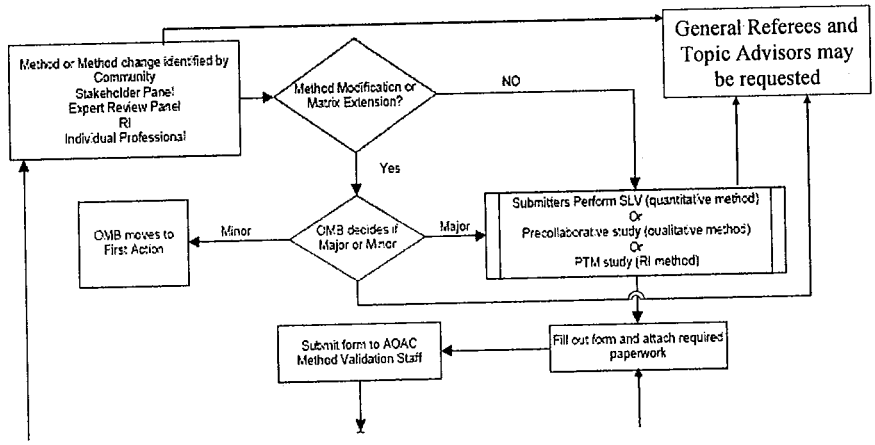

Collaborative Study Evaluation: Later Stages

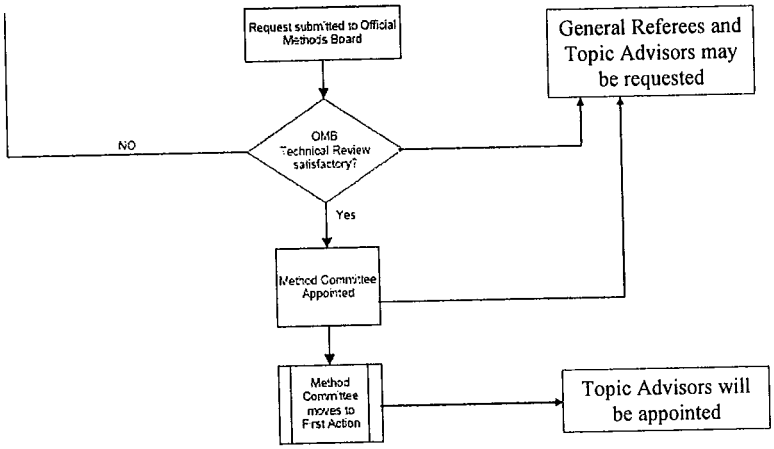

Process

- **Community or Stakeholders submits application materials to AOAC staff**
- **AOAC Staff makes a quick check to ensure there are no major omissions with the submission**
- **OMB chair, with assistance from AOAC staff, locates technical and process experts (GRs, TAs, from the Pool of Experts) to help**

Process (II)

- Community/Stakeholders/Company submits application materials to AOAC staff
- AOAC Staff reviews application for completeness
- OMB establishes method committee (3-5 voting members) and approves subject matter and process experts as advisors
- Safety and Statistical Advisors are also assigned to advise the committee
- All advisors are non-voting members of the method committee

Process (III)

- **Study Director is appointed**
- **Once the method committee is formed the Study Director is notified**
- **Evaluation will follow existing AOAC guidelines**

Duties and Responsibilities of a GR

- **Work with Study Directors providing guidance in the validation process**
- **Respond to questions from the Method Committee, AOAC Research Institute, Community, Stakeholder group, or the OMB.**
- **Review reports of Study Director and recommend appropriate action to the method committee**

Eliminated from the GR's Past Responsibilities:

- **Writing the "GR Report"**
  - **Caveat: for existing committees the GRs will continue to write the reports until the existing committees are retired**
- **Identifying the "method type"**

  (new, modification, matrix extension, etc., will be done by OMB)

The Scientific Association Dedicated to Analytical Excellence®

Roles of a Topic Advisor

- **Work with Study Directors, and GRs, giving guidance in designing and conducting collaborative studies and assisting in finding collaborators.**
- **Serve as an expert in a specific topic area**
- **Answer inquiries from the OMB, Methods Committee, Community, or Stakeholders group.**

Roles of a Topic Advisor, Con't

- Review and recommend changes in OMA
- Collect and review feedback for methods brought to First Action. Two years after the Method has been brought to First Action, prepare a report to the OMB on the recommendation of whether to proceed to Final Action or Repeal.

TAs:

- Are encouraged to provide topical reports to the OMB
- May advise more than one Committee, Community, or Stakeholder group

Roles Eliminated from the TA

- **Writing Topic Advisor Reports as part of the "GR Report"**

Some Considerations

- **GRs and TAs will both be able to serve on Methods Committees, if appointed by the OMB**
  - **As members (voting)**

  or
  - **As advisors (non-voting)**

This is a major distinction between the "old" process and the new process

More Considerations

- **GRs and TAs can serve on multiple methods committees concurrently**

More Considerations

- **What about the GR reports?**
  - **Will not be required**
  - **The method committee Chair will be responsible for progress reports on the method (not the GR)**

Criteria for Becoming a TA or GR

- **Member of AOAC International**
- **Have a letter of support from sponsoring organization (employer)**
- **Completed Volunteer Acceptance Form (VAF)**
- **Completed Non-Disclosure Form and/or confidentiality Agreement (certain instances)**

Criteria for Becoming a TA or GR Con't

- **Experience or training in validation/ collaborative process, preferably as a Study Director (for GR)**
- **Demonstrated expertise in subject area, including publications and/or years of experience (for TA)**
- **Successful Completion of appropriate OMA Training courses (with refresher training at least every 3 years)**
- **Recommendation by the relevant Community (optional)**

The Scientific Association Dedicated to Analytical Excellence®

Process for Appointing a GR or TA

- **The OMB, Methods Committee, AOAC-RI, or Community /Stakeholder Group determine the need for a GR. The Chair of the Methods Committee (or other requesting body) notifies the OMB Chair of this need.**
- **Nominations can be solicited from the associated Community, the OMB, and general membership.**
- **Interested parties are asked to submit letters of interest addressing the criteria, resumes/CVs, and a letter of support from their sponsoring organization to AOAC staff**

Appointment Process, Con't

- The materials are forwarded to the Chair of the Method Committee (or other requesting body) for consideration.
- The Chair of the Method Committee (or other requesting body) recommends a GR/TA to the OMB chair. Upon agreement by the OMB, the OMB chair recommends appointment of the GR/TA candidate selected to the AOAC President.
- If accepted, copies of the appointment letter will be sent to the chair of the requesting body and the GR/TA's supervisor.
- The GR or TA normally serves a three-year term unless otherwise recommended by the chair of the Method Committee (or other requesting body)

OMB Approval Process

- **The Chair of OMB will forward the nominee's materials to two members of the OMB for review. They will review the documents and, on behalf of the OMB, advise the chair on an appointment decision.**

Where Can GRs and TAs Find Information?

- Method Volunteers (OMB and method committees)
- Statistical and Safety Advisors
- Contact research scientists
- Literature and AOAC Professional Development Courses
- AOAC Sections
- AOAC Analytical Communities
- AOAC Staff & Technical Consultants

Rewards of Being a GR or TA

- **Greatly facilitating the validation process is a substantial accomplishment**
- **Developing a network with other scientists, industry, and government agencies**
- **Improved contacts with stakeholders and communities**
- **Access to up-to-date information on methods in your field**

Rewards of Being a GR or TA

- **Improved knowledge, skills, and abilities in method validation**